A correlation for the air-side heat transfer coefficient of natural-draft wire-on-tube condensers

Rodolfo S. ESPÍNDOLA, Cláudio MELO

POLO Labs, Department of Mechanical Engineering, Federal University of Santa Catarina
Florianópolis, 88040-970, Brazil, melo@polo.ufsc.br

ABSTRACT

In order to improve performance, manufacturers of household refrigerators are constantly updating the design of natural-draft wire-on-tube condensers. As a consequence, the geometrical application range of the current correlations became outdated. In this context, the aim of this work was to extend the limits of the existing mathematical models by proposing a new and updated correlation to predict the air-side heat transfer coefficient. To this end, a test bench was designed and built to circulate hot brine through the condenser tubes, controlling the inlet temperature and the mass flow rate. Fifty-four condenser samples with distinct design parameters, such as height, tube and wire diameters and pitches were manufactured and tested. The experimental results showed that the condenser height, and the wire and tube pitches had the strongest impact on the heat transfer rate. Finally, a semi-empirical correlation was put forward, where 90% of the experimental data were predicted within a ±10% error band.
Keywords: Wire-on-tube Condenser, Household Refrigeration, Semi-empirical Correlation

1. INTRODUCTION

When it comes to household refrigeration, cost and energy efficiency are the driving forces of most research works. Sometimes cost reduction is even more important than energy savings. That is the case for appliances mounted with natural-draft wire-on-tube condensers. Such heat exchangers are made of carbon-steel and consist of a single-pass coil with several wires spot-welded in an in-line or staggered arrangement on both sides. The combination of material and manufacturing process makes the wire-on-tube condenser perhaps the cheapest heat exchanger on the market and the preferred choice of most engineers. However, despite the widespread use of wire-on-tube condensers, the literature is still scarce on the topic.

Among the available works stand the pioneer studies of Witzell and Fontaine (1957), Witzell et al. (1959), Cyphers et al. (1959) and Collicott et al. (1963). Witzell and Fontaine (1957) assembled the first experimental apparatus to measure the heat transfer rate based on the circulation of hot water through the coil. The condensers were tested in a horizontal position and only the number and diameter of the wires were varied. Cyphers *et al*. (1959) adopted a similar test bench and analysed the impact of both inclination and confinement. Semi-empirical correlations based on the Grashof number were proposed to predict the convection heat transfer coefficients for both tubes and wires. Later, Witzell et al. (1959) improved the test section used by Witzell and Fontaine (1957) by placing the condensers in a black wood box with openings at the bottom and top parts. Tests varying the inclination of the condenser and the wires pitch were conducted. The number of tubes was kept constant. In addition, a single correlation for the convection heat transfer was put forward based on an equivalent diameter. All previous studies, however, assumed a unitary shape factor and neglected its effect on the radiation heat transfer calculation. In order to address this issue, Collicott et al. (1963) calculated the effective shape factor of 12 samples with the same tube diameter but with different wire pitches. The authors performed all tests in an evacuated chamber seeking to quantify the radiative contribution. Decades later, Tagliafico and Tanda (1997) revisited the subject by carrying out tests with 42 samples. Geometric parameters such as condenser height, tubes and wires pitch and tube diameter were varied. The effect of confinement was not evaluated. Temperature differences between air and tubes of almost 50°C were observed in some cases. A correlation based on the Rayleigh number and geometry was proposed and validated within a ±6% error band.

Years later, Arsego (2003) tested 24 samples with in-line wires under several operating conditions by pumping water into the tubes. An experimental apparatus capable of reproducing the condenser behavior as if it was mounted on a real appliance was assembled. Parameters such as number, diameter and pitch of tubes and wires were investigated. The condensers height and width, however, were kept constant. The convection and radiation heat transfer shares were calculated and the latter took the tubes and wires shape factors into account. Melo *et al*. (2004) used the same test bench of Arsego (2003) to study the effect of the gap between the refrigerator back wall and the surroundings on the heat transfer. To this end, a 19-tube rows and 130 wires condenser was tested at an ambient temperature of 32°C. Also, the temperature difference between the condenser inlet and outlet was maintained between 43 and 44°C. It was shown that the gap between the rear wall and the refrigerator plays an important role and that when the condenser is positioned at the middle of the gap the heat transfer rate is maximized.

Recently, Melo and Hermes (2009) used the experimental database of Arsego (2003) to devise an easy-to-use π-type correlation based on geometric parameters and the temperature difference between air and tube wall. The wires fin-efficiency was incorporated in the air-side heat transfer coefficient and the surface shape factor was neglected. Even though, 90% of the experiments were predicted within a 10% error band. A comparison with the correlations proposed by Cyphers et al. (1959), Witzell et al. (1959) and Tagliafico and Tanda (1997) was reported and it was found that all produced larger errors.

In order to reduce cost and maintain reasonable energy consumption levels, wire-on-tube condensers are constantly being redesigned with the aid of the currently available correlations. However, such equations are restricted to specific geometric ranges and have proven to be unable of predicting well the heat transfer rate of the new condenser designs, especially those with different heights and staggered and smaller wires. In this context, the present work aimed to fill this gap by proposing a new semi-empirical model. Fifty-four samples covering a wide range of geometric parameters were tested in a water-loop calorimeter to leverage the correlation.

2. EXPERIMENTAL WORK

Fifty-four condensers were designed and manufactured specifically for this work where the following parameters were varied: height (H = 480, 900 and 1400 mm), tube pitch (s_t = 25, 40 and 60 mm), tube outer diameter (d_t = 4.76 and 4.00 mm), wire pitch (s_w = 4, 10 and 20 mm) and wire diameter (d_w = 1.25 and 1.35 mm). An illustrative sketch of the condensers is shown in Fig. 1. All samples were fabricated in carbon steel, with staggered wires and a constant width (W) of 440 mm.

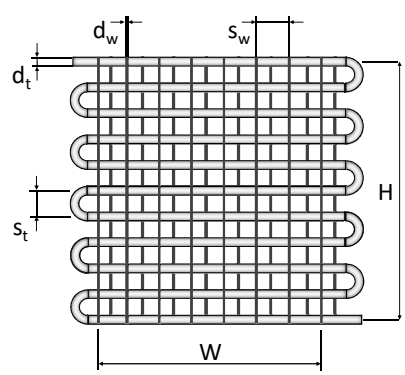

Figure 1: Wire-on-tube condenser sketch

2.1. Experimental Apparatus

The experimental apparatus is comprised by three main facilities: the test bench, the test section and the test chamber, as schematically shown in Fig. 2. The test bench is responsible for circulating a hot brine composed by water and glycol (80/20% in mass) inside the carbon steel tubes. It is basically comprised by a thermostatic bath, a rotary vane pump, valves and filters. An electric heating wire was placed around the tubes to fine-adjust the fluid inlet temperature.

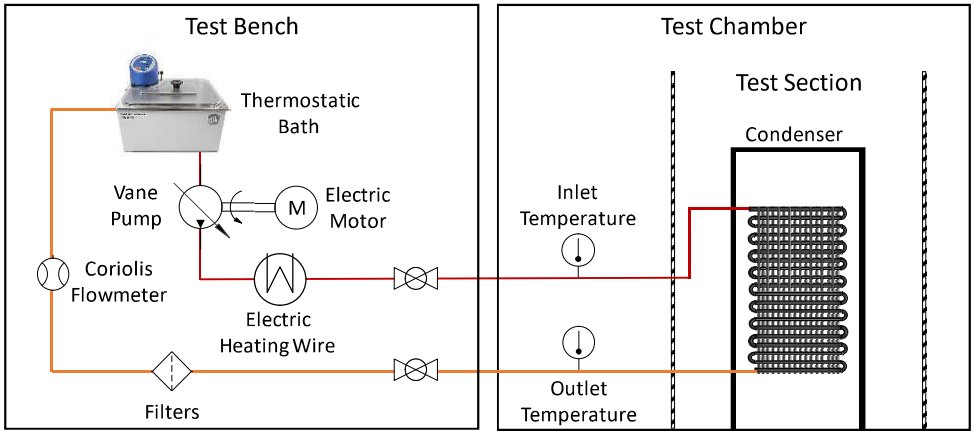

Figure 2: Experimental apparatus

The test section was built in order to mimic a domestic refrigerator (Fig. 3). The section height could be varied in such a way that the condenser distance from the ground and from test section top was always 300 mm, regardless of the height of the condenser. The distance from the test section side walls and the surrounding walls was also kept at 300 mm. The test section and surroundings walls were made of dull black wood in accordance the recommendations of ISO 15502 (2005). Finally, the gap from the test section rear wall and the test chamber was 100 mm, and the condensers were always placed in the middle of this gap, at 50 mm from the test section rear wall.

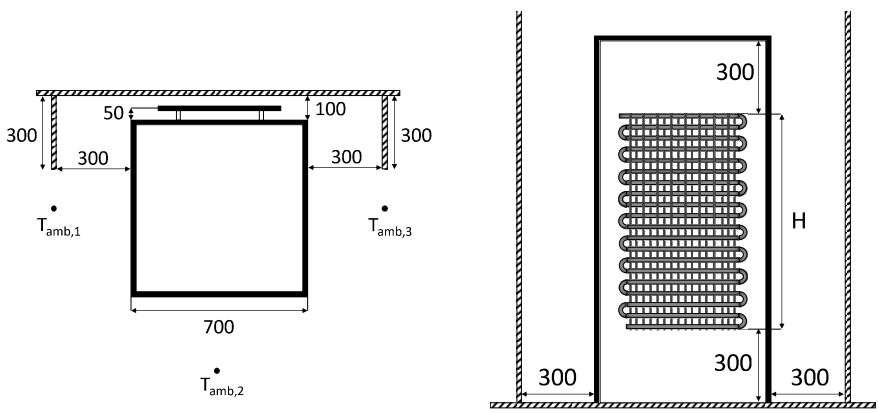

Figure 3: Test section top and back view

The tests were performed in a climate-controlled chamber also built in accordance to the ISO 15502 (2005) recommendations. The ambient temperature was measured by three T-type thermocouples, as shown in Fig. 3. The fluid mass flow rate was measured by a Coriolis-type flow meter and the temperature difference by two T-type immersion thermocouples placed in the condenser inlet and outlet (see Fig. 2).

The condensers were tested at ambient temperatures of 32 and 16°C. The brine temperature difference from the inlet and outlet of the condenser was always kept at 3°C, in order to provide an almost uniform temperature in the condenser tubes. The tests were performed with brine average temperatures (T_{br}) of 8, 13 and 20°C higher than the ambient temperature. In total, 228 experiments were performed and used to leverage an air-side heat transfer correlation.

3. DATA REGRESSION

The total heat transfer rate ($\dot{Q}$) was calculated through an energy balance on the brine side, considering the brine mass flow rate ($\dot{m}$) and the inlet and outlet temperature difference:

$$\dot{Q} = \dot{m} c_p \left(T_{br,i} - T_{br,o}\right) \qquad \text{Eq. (1)}$$

where c_p was obtained at the brine inlet ($T_{br,i}$) and outlet ($T_{br,o}$) average temperature.
The condenser overall thermal conductance (UA) was derived from the relation between the heat released rate and the temperature difference between the brine and surroundings:

$$UA = \dot{Q}(T_{br} - T_{amb})^{-1} \quad \text{Eq. (2)}$$

where T_{br} and T_{amb} are respectively the brine and ambient average temperatures.
Generally, when the fluid temperature difference is high, it is appropriate to use log-mean difference temperature or the ε-NUT method. However, as in the present study the brine temperature difference was as low as 3°C, this simplification is of reasonable use. The air-side heat transfer coefficient, h_0, was then calculated by subtracting the internal convection resistance from the overall thermal resistance:

$$\eta_0 h_0 = A_0^{-1}[UA^{-1} - (h_i A_i)^{-1}]^{-1} \quad \text{Eq. (3)}$$

where η_0 is the overall outer surface efficiency, h_i is the internal heat transfer coefficient and A_i and A_0 are respectively the internal and external total heat transfer areas. The conduction through the tube walls and fouling resistances on both sides were neglected. The internal side heat transfer coefficient was estimated by Gnielinski's (1976) correlation when $\mathrm{Re} > 3000$. Laminar fully developed flow with uniform wall temperature ($Nu = 3.66$) was considered when $Re < 2300$. The transition between Gnielinski and laminar flow ($2300 < Re < 3000$) was obtained through the method of the asymptotes.
Assuming that the heat transfer coefficient is constant along the wires and tubes, a simplified approach was employed to evaluate the overall surface efficiency, which was given by:

$$\eta_0 = 1 - A_w A_0^{-1}(1 - \eta_w) \quad \text{Eq. (4)}$$

where η_w is the wire rectangular pin fin efficiency with adiabatic tip defined as (Incropera *et al.*, 2002):

$$\eta_w = \tanh\left(m\frac{s_t}{2}\right)\left(m\frac{s_t}{2}\right)^{-1} \quad \text{Eq. (5)}$$

$$m = [4h_0(k_w d_w)^{-1}]^{1/2} \quad \text{Eq. (6)}$$

The total rate of heat rejection to the environment of the wire-on-tube condenser is a result of convective and radiative phenomena. Thus, the total air-side heat transfer coefficient is comprised by the sum of both coefficients, $h_0 = h_c + h_r$. The radiation heat transfer coefficient is derived from the well-known Stefan-Boltzmann law:

$$h_r = \varepsilon_{app}\sigma(T_c + T_{amb})(T_c^2 + T_{amb}^2) \quad \text{Eq. (7)}$$

where T_c is the condenser surface average temperature calculated through an energy balance:

$$T_c = T_{amb} + \dot{Q}(\eta_0 h_0 A_0)^{-1} \quad \text{Eq. (8)}$$

σ is the Stefan-Boltzmann constant and ε_{app} is the apparent emissivity defined by the product of surface emissivity, ε, and condenser to environment shape factor, F. The condenser surface emissivity was measured through thermography techniques and an average value of 0.95 was found. The condenser to environment shape factor was analytically calculated as follows (Siegel and Howell, 1972):

$$F = \frac{A_t F_{t\to\infty} + A_w F_{w\to\infty}}{A_t + A_w} \quad \text{Eq. (9)}$$

where $F_{t\to\infty}$ and $F_{w\to\infty}$ are the tubes and wires to the surroundings shape factors, respectively. The condenser shape factor ranged from 0.58 to 0.85 for all samples.
Accounting for all instrument errors and propagated uncertainties, the maximum uncertainty levels corresponding to the temperature, mass flow rate and heat transfer rate were respectively ±0.2°C, ±0.02 kg/h, and ±5%.

4. RESULTS

4.1. Experimental Results

Fig. 4 summarizes the relative contribution of the radiation and convection to the combined air-side heat transfer coefficient. It is known that both are strongly dependent on the wire pitch. As the wire pitch reduces, the confinement reduces both the condenser shape factor and the buoyancy effect, reducing respectively the radiative and convective phenomena, and therefore the combined air-side heat transfer coefficient. Nonetheless, it can be noted that the radiative relative contribution (which ranged from 22% to 57%) increases with a decreasing h_0, indicating that the confinement has a stronger effect in the convection counterpart. Similar results were obtained by Melo and Hermes (2009), except by the overestimation of the radiative contribution due to the shape factor negligence.

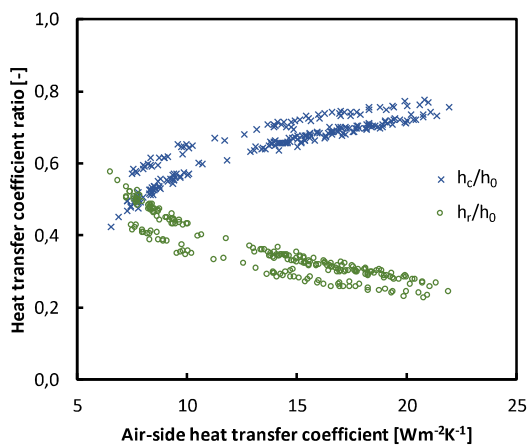

Figure 4: Convective and radiative contributions to the air-side heat transfer coefficient

Fig. 5 summarizes the condenser heat transfer rate results as a function of the condenser height, wire pitch and tube pitch. The total heat transfer rate ranged from 35 W to 175 W, as a combination of the selected geometric parameters and operational conditions. As expected, the higher the condenser, the higher the total heat transfer rate. The wire pitch is another parameter that strongly affected the heat transfer rate, especially because the total heat transfer area increases as the wire pitch decreases. A similar trend was observed for the tube pitch. In this case, it can be noted that, the higher the condenser the stronger the variations in heat transfer rate, due to the stronger buoyancy effect. The influence of tubes and wires diameters on total heat transfer rate were not significant, with variations lower than 4%.
One important issue of the industry nowadays is evaluating the cost-benefit relationship in the refrigeration components. In this context, Fig. 6 shows the relation between the ratio of heat transfer rate per the condenser steel mass to the same geometric parameters analysed previously. Such ratio is directly proportional to the manufacturing cost. Note that the condenser height barely affects the cost-benefit relationship, so it is just a matter of capacity designing. On the other hand, a clear trend was observed regarding the wire pitch. The larger the wire pitch, the better the cost-benefit, due to the confinement effect provoked by short pitches. It can also be seen that there is an optimum tube pitch that maximizes the benefit-cost relation. Such results might be related to the physics of natural convection in in-line tubes. As the condenser tubes are heated up, a thermal plume is formed around the tube, driving the air upwards and dissipating heat to the surroundings. This means that, if the condenser tubes are very close to each other, the upper tubes are affected by the thermal plume, hindering the condenser performance. On the other hand, if the tubes are too far from each

other, the thermal plume is dissipated far from the upper tube, meaning that space could be optimized. This analysis shows a clear trade-off relationship, leading to an optimum point that, for this specific work, seems to be close to the 40 mm tube pitch.

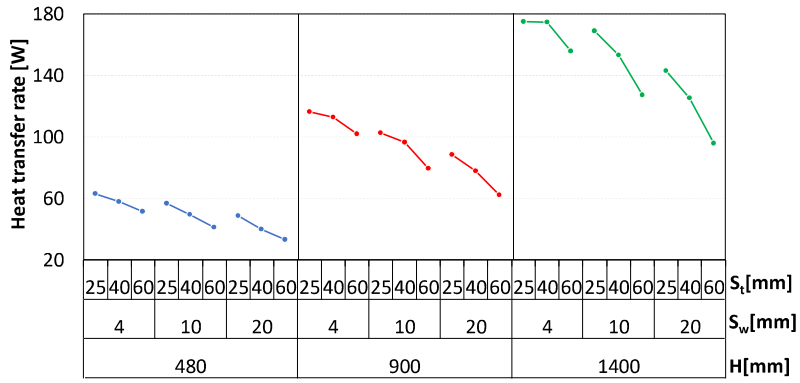

Figure 5: Heat transfer rate vs. height, wire pitch and tube pitch

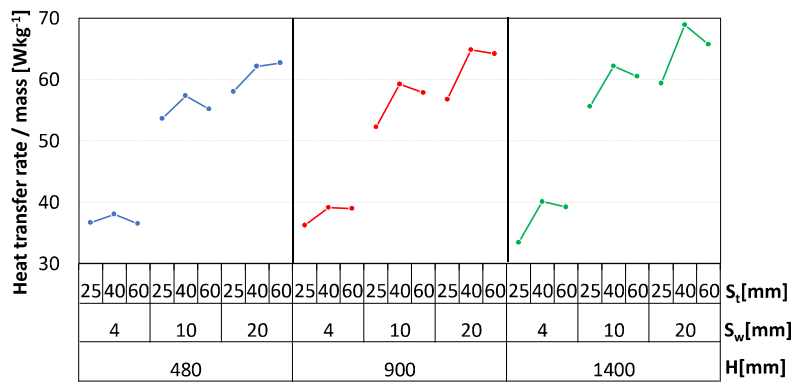

Figure 6: Heat transfer rate per unit of mass vs. height, wire pitch and tube pitch

4.2. Proposed correlation

A semi-empirical correlation was proposed to predict the air-side heat transfer coefficient considering the geometric range of the condenser samples. The combined coefficient was calculated by adding the convective and radiative counterparts ($h_0 = h_c + h_r$). The radiation contribution is obtained through Eq. 7, and a correlation was proposed for the convection heat transfer coefficient. The equation takes into account the buoyancy effect and geometric parameters, as follows:

$$Nu_{L_c} = \frac{h_c k_a}{L_c} = 6.2 {Ra_{L_c}}^{1/5} Z^{3/5} \qquad \text{Eq. (10)}$$

The Rayleigh number is defined by:

$$Ra_{L_c} = \frac{g\beta(T_{br} - T_{amb})L_c^3}{\nu_a \alpha_a} \qquad \text{Eq. (11)}$$

where the air properties must be evaluated in the film temperature, the characteristic length is defined as the ratio between the outer heat transfer area and the condenser height, $\mathrm{L_c} = \mathrm{A_0}/H$, and the dimensionless parameter (Z) is defined by:

$$Z = \frac{\text{Void area}}{\text{Available area}} = \frac{WH - N_t d_t W - N_w d_w H + N_t N_w d_t d_w}{WH} \qquad \text{Eq. (11)}$$

The parameter Z is the ratio of the void area and the available area in a perpendicular point of view. That is, the larger the void area, the larger the tube and wire pitches, increasing Z and h_c. The validation results are shown in Fig. 7, where 99% and 90% of the predicted data fell within ±15% and ±10% error bands, respectively.

Finally, the correlations available in the literature were implemented to predict the air-side heat transfer coefficient, as shown in Fig. 8. It can be noted that much larger errors were found, especially because of the design parameters range of the actual wire-on-tube condenser samples. Since most of the correlations are empirical, they are not suitable for extrapolations. Cyphers *et al*. (1959) correlation substantially overestimated the heat transfer coefficient, with errors up to +200%. The correlation of Tanda and Tagliafico (1997), which is far more complex than that proposed herein, underpredicted most of the data and large deviations were observed. On the other hand, the empirical π-type correlation of Melo and Hermes (2009), which is reasonably recent, overestimated most of the experimental data.

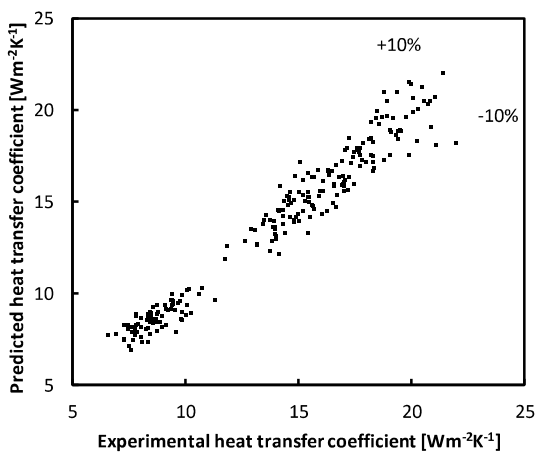

Figure 7: Validation of the proposed semi-empirical correlation

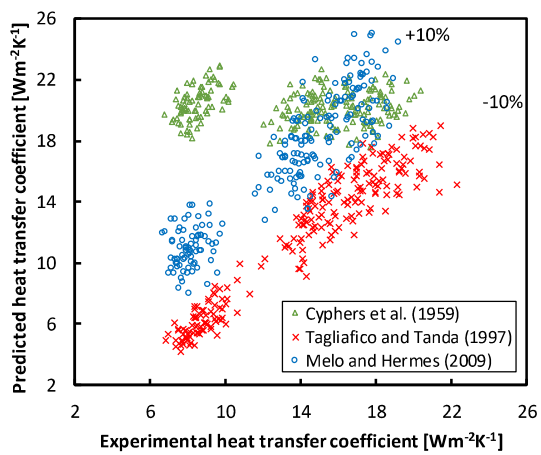

Figure 8: Comparison of the experimental data to the correlations available in the literature

5. CONCLUSIONS

This paper addressed an theoretical and experimental work on natural-draft wire-on-tube condensers. Fifty-four condenser samples were manufactured varying the following design parameters: height (480, 900 and 1400 mm), tube diameters (4.00 and 4.76 mm), wire diameters (1.25 and 1.35 mm), tube pitches (25, 40 and 60 mm) and wire pitches (4, 10 and 20 mm). The condensers were tested on an experimental apparatus built specifically for this activity. The experimental results showed that the tube and wire diameters impacted less than 4% the condenser heat transfer rate. Furthermore, the wire and tube pitches were the most significant parameters on a cost-benefit analysis. Finally, a semi-empirical correlation was proposed for the air-side heat transfer coefficient, where 90% of the experimental data were predicted with deviations lower than ±10%. The condenser shape factor was calculated to account the radiative contribution, which was responsible for an average of 35% of the total heat transfer rate. The convective contribution was much stronger specially due to the free convection buoyancy effect.

ACKNOWLEDGEMENTS

This study was made possible through the financial investment from the EMBRAPII Program (POLO/UFSC EMBRAPII Unit - Emerging Technologies in Cooling and Thermophysics). Whirlpool and Bundy are also duly acknowledged for their financial and technical support. The authors also thank Cesar A. Pacheco, Flávia L. de Araujo and Niklas Assfalg for their help with experiments.

NOMENCLATURE

A_0	external area (m^2)	A_i	tubes internal area (m^2)
A_t	tubes external area (m^2)	A_w	wires area (m^2)
α_a	air thermal diffusivity (m^2s^{-1})	β	air vol. coef. of thermal expansion (K^{-1})
c_p	specific heat ($Jkg^{-1}K^{-1}$)	d_t	tube external diameter (m)
d_w	wire diameter (m)	ε	surface emissivity (-)
ε_{app}	surface apparent emissivity (-)	η_0	overall fin efficiency (-)
η_w	fin efficiency (-)	g	gravity (ms^{-2})
F	surface shape factor (-)	H	condenser height (m)
h_0	air-side heat transfer coefficient ($Wm^{-2}K^{-1}$)	h_c	convective heat transfer coef. ($Wm^{-2}K^{-1}$)
h_i	internal heat transfer coef. ($Wm^{-2}K^{-1}$)	h_r	radiative heat transfer coef. ($Wm^{-2}K^{-1}$)
k_a	air thermal conductivity ($Wm^{-1}K^{-1}$)	k_w	wire thermal conductivity ($Wm^{-1}K^{-1}$)
L_c	characteristic length (m)	$\dot{m}$	brine mass flow rate (kgs^{-1})
N_t	number of tubes (-)	N_w	number of wires (-)
Nu	Nusselt number (-)	ν_a	air kinematic viscosity (m^2s^{-1})
$\dot{Q}$	heat transfer rate (W)	Ra	Rayleigh number (-)
Re	Reynolds number (-)	σ	Stefan-Boltzmann constant ($kgs^{-3}K^{-4}$)
s_t	tube spacing (m)	s_w	wire spacing (m)
T_{amb}	ambient temperature (K)	T_{br}	brine average temperature (K)
$T_{br,i}$	brine inlet temperature (K)	$T_{br,o}$	brine outlet temperature (K)
T_c	surface average temperature (K)	UA	overall thermal conductance (WK^{-1})
W	condenser width (m)		

REFERENCES

Arsego, C., 2003. Experimental evaluation of wire-and-tube condensers performance, MSc thesis, Federal University of Santa Catarina, Florianopolis, SC, Brazil (in Portuguese).

Collicott, H.E., Fontaine, W.E., Witzell, O.W., 1963. Radiation and free convection heat transfer from wire and tube heat exchangers. ASHRAE J. 5 (12), 79–83.

Cyphers, J.A., Cess, R.D., Somers, E.V., 1959. Heat transfer character of wire and tube heat exchangers. ASHRAE J. 1 (5), 86–110.

Gnielinski, V., 1978. New equations for heat and mass transfer in turbulent pipe and channel flow. Int. J. of Chem. Eng. 16 (2), 359–387.

Holman, J.P., 1994. Experimental Methods for Engineers. McGraw-Hill, New York City, 640 p.

Incropera, F.P., DeWitt, D.P., Bergman, T.L., Lavine, A., 2002. Fundamentals of Heat and Mass Transfer. John Wiley & Sons, Hoboken, 1050 p.

ISO 15502, 2005. Household Frost-free Refrigerating Appliances – Characteristics and Test Methods. International Organization for Standardization, Geneva, 85 p.

Melo, C., Arsego, C., Maykot, R., 2004. Experimental evaluation of wire-and-tube condensers: confining walls effect. Proceedings of the 10th International Refrigeration and Air Conditioning Conference at Purdue, West Lafeyette, Illinois, United States.

Melo, C., Hermes, C.J.L, 2009. A heat transfer correlation for natural draft wire-and-tube condensers. Int. J. Refrig. 32, 546–555.

Siegel, R., Howell, J.R., 1972. Thermal Radiation Heat Transfer. McGraw-Hill Kogakusha, Tokyo, 814 p.

Tagliafico, L., Tanda, D.W., 1997. Radiation and natural convection heat transfer from wire-and-tube heat exchangers in refrigeration appliances. Int. J. Refrig. 20 (7), 461–469.

Witzell, O.W., Fontaine, W.E, Papanek, W.J., 1959. Convective films evaluated for wire and tube heat exchangers. ASHRAE J. 1 (6), 35-37.

Witzell, O.W., Fontaine, W.E., 1957. What are the heat transfer characteristics of wire and tube condensers. Refrigerating Engineering 65 (3), 33-37.